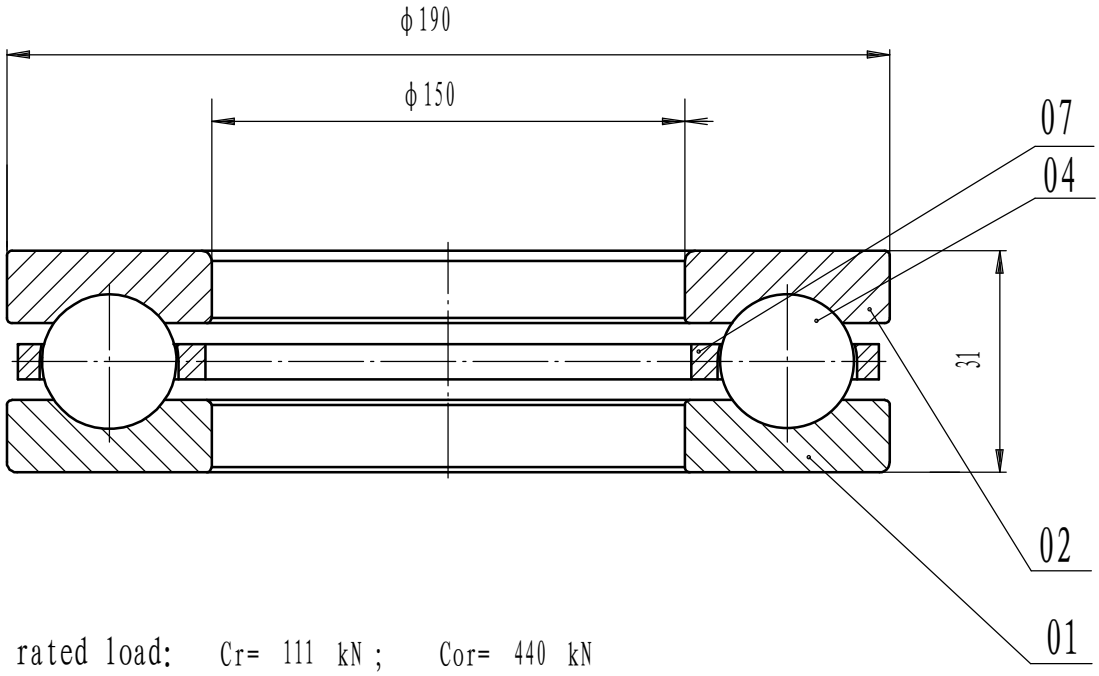

1 rated load: Cr= 111 kN ; Cor= 440 kN

2 Heat treatment according to the current standards

Remark:

1. Luoyang Jiecheng Bearing Technology Co., Ltd is a technical Inc,specialize in designing and manufacturing thrust bearing, we can design and manufactur all kinds of thrust bearing according to client's requirement.

2. This drawing is reference for user,if you need formal drawing,please contact wth us sales@jcb-bearing.com, the official drawing will be sent after order confirmation.

serial	Name	Qty	Material			
07	cage		steel			
04	steel ball		steel GCr15-GB/T18254			
02	shaft washer		steel GCr15SiMn-GB/T18254			
01	house washer		steel GCr15SiMn-GB/T18254			
				weight (kg)		2.20 KG

Thrust ball bearing

51130 M

Add: D1805, No.3 Lianmeng road, Luoyang, Henan,China.
Postal: 471003
Phone: +86-379-68611678
Fax: +86-379-68611679
E-mail: sales@jcb-bearing.com

Luoyang Jiecheng Bearing Technology Co., Ltd